Low Capacitance, Class I, Division 2/Zone 2 Accelerometer, For Use In "Non-Arcing, Non-Sparking" Environments, Top Exit Connector/Cable, 50 mV/g

Actual Product Size Shown

II 3 G D

Must Use "Class I, Division 2" CB190 or CB206 Cable and D2Q Connectors

Product Features

Class I, Division 2/Zone 2 Rating

Excellent for Higher g Applications

- *±100 g, Peak Dynamic Range*
- *50 mV/g, ±10% Sensitivity*
- *0,8 - 15000 Hz (48 - 900,000 CPM) Frequency Response*

AC933-1A
2 Pin Connector

Connector Pin	Polarity
A	(+) Signal / Power
B	(-) Common

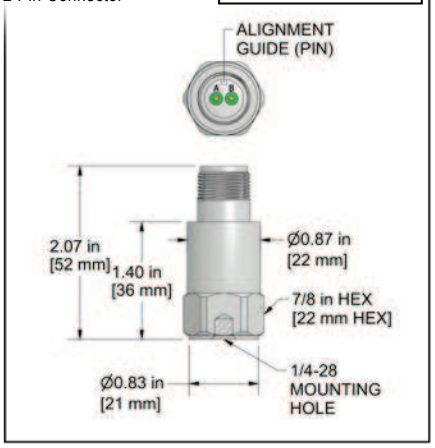

AC933-2C
Integral Cable

Conductor	Polarity
Red	(+) Signal / Power
Black	(-) Common
Shield	Cable Drain Wire

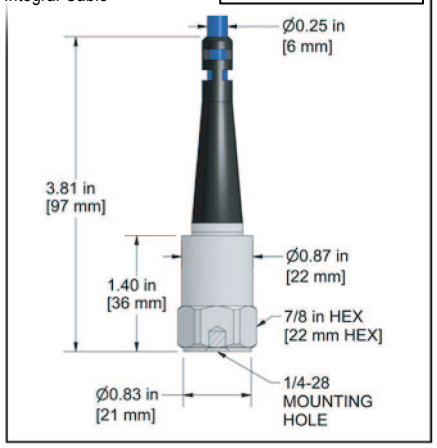

AC933-3C
Armored Integral Cable

Conductor	Polarity
Red	(+) Signal / Power
Black	(-) Common
Shield	Cable Drain Wire

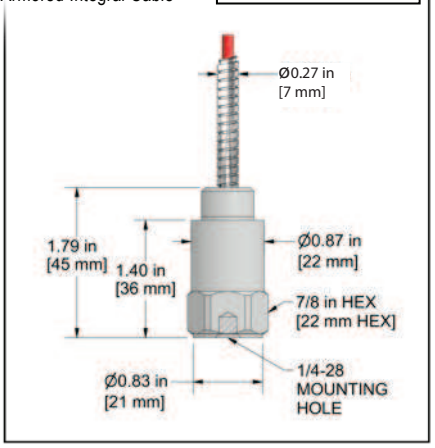

Specifications	Standard	Metric
Part Number	AC933	M/AC933
Sensitivity (±10%)	50 mV/g	
Frequency Response (±3dB)	48-900,000 CPM	0,8-15000 Hz
Frequency Response (±10%)	90-390,000 CPM	1,5-6500 Hz
Dynamic Range	± 100 g, peak	
Electrical		
Settling Time	<3 Seconds	
Voltage Source (IEPE)	18-28 VDC	
Constant Current Excitation	2-10 mA	
Spectral Noise @ 10 Hz	30 µg/√Hz	
Spectral Noise @ 100 Hz	25 µg/√Hz	
Spectral Noise @ 1000 Hz	25 µg/√Hz	
Output Impedance	<100 ohm	
Bias Output Voltage	10-14 VDC	
Case Isolation	$>10^8$ ohm	

Specifications	Standard	Metric
Environmental		
Temperature Range	-40° to 250°F	-40° to 121°C
Maximum Shock Protection	5,000 g, peak	
Electromagnetic Sensitivity	CE	
Sealing	IP68	
Physical		
Sensing Element	PZT Ceramic	
Sensing Structure	Shear Mode	
Weight	3.2 oz	91 grams
Case Material	316L Stainless Steel	
Mounting	1/4-28	
Connector (non-integral)	2 Pin MIL-C-5015	
Resonant Frequency	1,380,000 CPM	23000 Hz
Mounting Torque	2 to 5 ft. lbs.	2,7 to 6,8 Nm
Mounting Hardware	1/4-28 Stud	M6x1 Adapter Stud
Calibration Certificate	CA10	

Ordering Information

Standard	AC933-1A (1/4-28 Stud) Stock Product	AC933-2C - / (1/4-28 Stud) Build To Order	AC933-3C - / (1/4-28 Stud) Build To Order
		(length in feet) - (termination)	(maximum armor length 100 ft.) / (cable length in feet) - (termination)
Metric	M/AC933-1A (M6x1 Adapter Stud) Stock Product	M/AC933-2C - / (M6x1 Adapter Stud) Build To Order	M/AC933-3C - / (M6x1 Adapter Stud) Build To Order
		(length in feet) - (termination)	(maximum armor length 100 ft.) / (cable length in feet) - (termination)
		(length in meters) M - (termination)	(maximum armor length 30 m) M / (cable length in meters) M / (termination)

Read Before Purchasing
Important information on Regulatory Approvals and Requirements
on Page 84

Cable Termination Options: L Z

Backed by our Unconditional Lifetime Warranty

CTC VIBRATION ANALYSIS HARDWARE